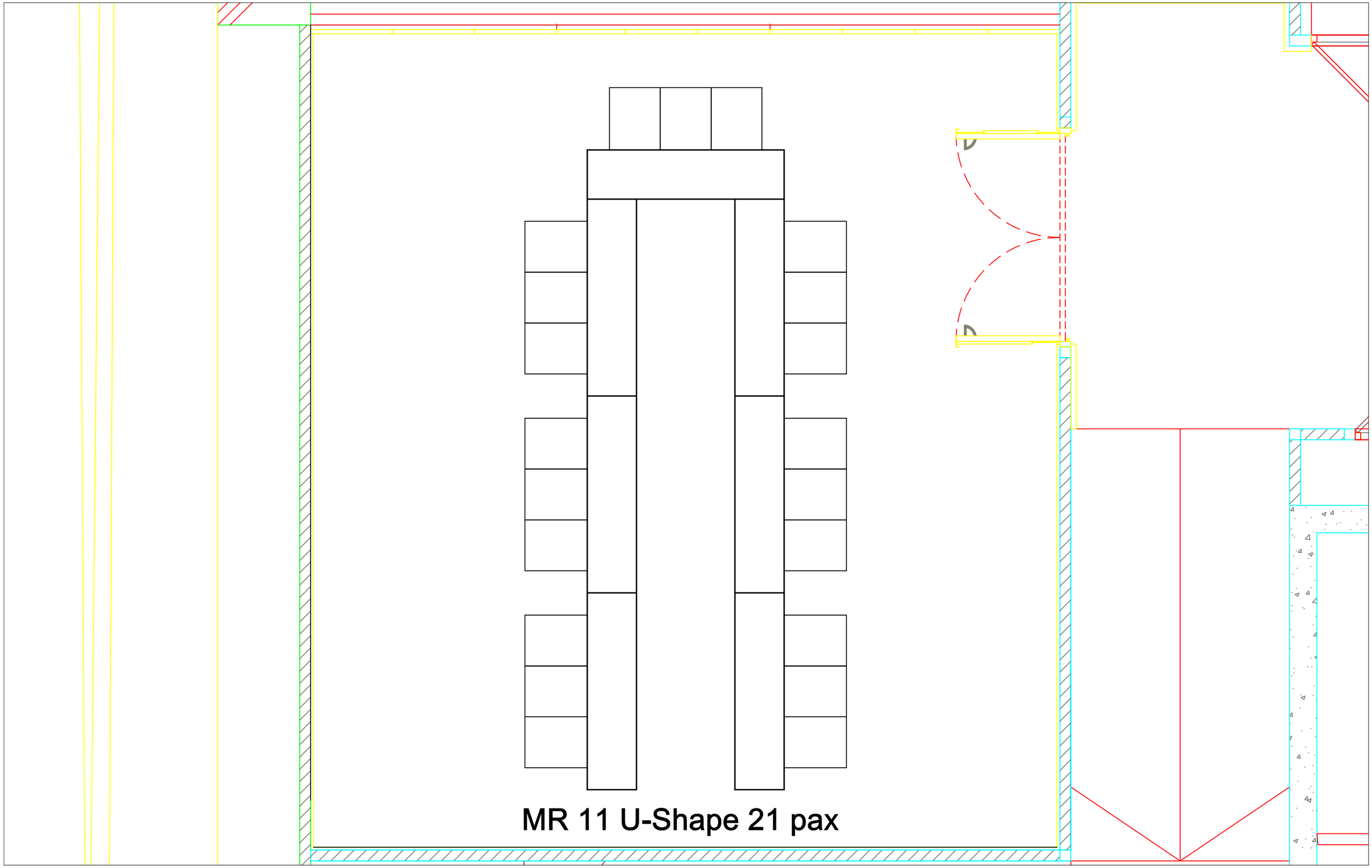

ICONSIAM HALL 299 ICONSIAM Shopping Center, 7th floor, Charoennakorn Road, Klongtonsai Subdistrict, Klongsan District, Bangkok 10600	Project Name : MR 11 U-Shape		Function Date :
	Type of function :	Pax : 21	Last Edited : 12/10/25